PROJECT REFERENCE NO.	SHEET NO.
SS-4905CK	Sig. 5.1

EDI MODEL 2018ECL-NC CONFLICT MONITOR PROGRAMMING DETAIL

(remove jumpers and set switches as shown)

REMOVE DIODE JUMPERS 1-6, 1-9, 1-11, 1-15, 2-6, 2-9, 2-11, 2-13, 2-15, 4-8, 4-12, 4-14, 4-16, 6-9, 6-11, 6-13, 6-15, 8-12, 8-14, 8-16, 9-11, 9-13, 9-15, 11-13, 11-15, 12-14, 12-16, 13-15 and 14-16.

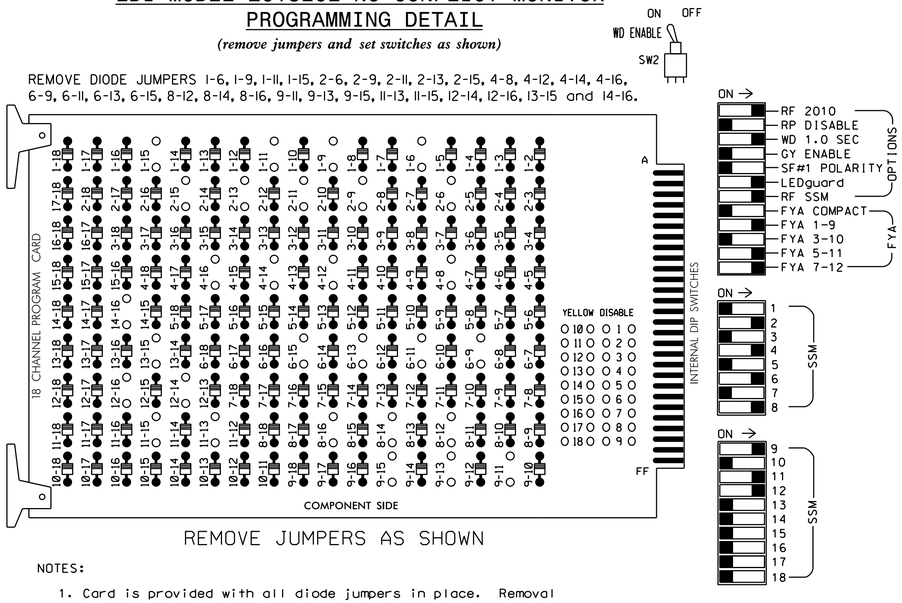

REMOVE JUMPERS AS SHOWN

NOTES:

1. Card is provided with all diode jumpers in place. Removal of any jumper allows its channels to run concurrently.
2. Ensure jumpers SEL2-SEL5 and SEL9 are present on the monitor board.
3. Ensure that Red Enable is active at all times during normal operation.
4. Connect serial cable from conflict monitor to comm. port 1 of 2070 controller. Ensure conflict monitor communicates with 2070.

NOTES

1. To prevent "flash-conflict" problems, insert red flash program blocks for all unused vehicle load switches in the output file. Verify that signal heads flash in accordance with the signal plans.
2. Program controller to Start Up in phases 2 and 6 green.
3. Set power-up flash time to 0 seconds within the controller programming. The conflict monitor will govern startup flash. Ensure STARTUP "RED START" is set to 0 seconds.
4. Enable Simultaneous Gap-Out feature for all phases.
5. Program all timing information into phase banks 1, 2, and 3 unless otherwise noted.
6. Set phase bank 3 maximum limit to 250 seconds for phases used.
7. Program phases 4 and 8 for Double Entry.
8. Ensure start up flash phases are coordinated with flash program block assignments.
9. Program Startup Ped Calls for phases 2, 4, 6, and 8.
10. Set the Red Revert interval on the controller to 1 second.
11. This cabinet and controller are part of the Durham Signal System.

EQUIPMENT INFORMATION

CONTROLLER.....2070E
CABINET.....332 W/ AUX
SOFTWARE.....McCAIN 2033
CABINET MOUNT.....BASE
OUTPUT FILE POSITIONS...18 WITH AUX FILE
LOAD SWITCHES USED.....S1,S2,S3,S5,S6,S8,S9,S11,S12, AUX S1,AUX S4,AUX S5
PHASES USED.....1,2,2 PED,4,4 PED,6,6 PED,8,8 PED
OVERLAP 1.....✳
OVERLAP 2.....NOT USED
OVERLAP 3.....2+6
OVERLAP 4.....4+8

✳ See FYA PPLT Programming Detail on Sheet 2.

SIGNAL HEAD HOOK-UP CHART

LOAD SWITCH NO.	S1	S2	S3	S4	S5	S6	S7	S8	S9	S10	S11	S12	AUX S1	AUX S2	AUX S3	AUX S4	AUX S5	AUX S6
CMU CHANNEL NO.	1	2	13	3	4	14	5	6	15	7	8	16	9	10	17	11	12	18
PHASE	1	2	2 PED	3	4	4 PED	5	6	6 PED	7	8	8 PED	OL1	OL2	SPARE	OL3	OL4	SPARE
SIGNAL HEAD NO.	11★	22,23	P21, P22	NU	42,43	P41, P42	NU	61,62	P61, P62	NU	81,82	P81, P82	11★	NU	NU	21★	41★	NU
RED		128			101			134			107							
YELLOW	✳	129			102			135			108							
GREEN		130			103			136			109							
RED ARROW													A121			A114	A101	
YELLOW ARROW													A122			A115	A102	
FLASHING YELLOW ARROW													A123			A116	A103	
GREEN ARROW	127																	
✋			113			104			119			110						
🚶			115			106			121			112						

NU = Not Used

✳ Denotes install load resistor. See load resistor installation detail this sheet.

★ See pictorial of head wiring in detail below.

FYA SIGNAL WIRING DETAIL

(wire signal heads as shown)

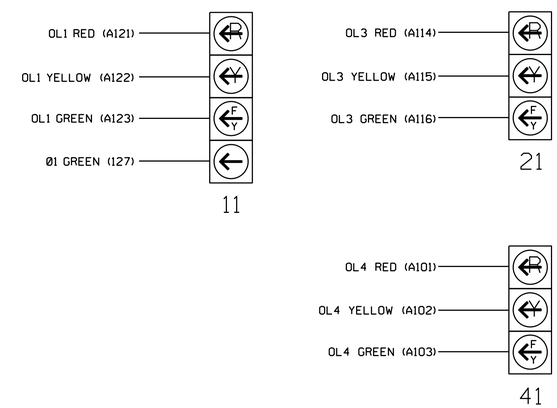

INPUT FILE POSITION LAYOUT

(front view)

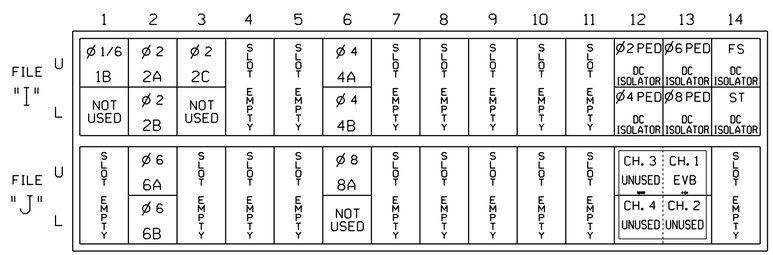

EX.: 1A, 2A, ETC. = LOOP NO.'S

FS = FLASH SENSE
ST = STOP TIME
EVx = EMERGENCY VEHICLE PREEMPT

4 CHANNEL TOMAR OSP CARD INSERT CARD INTO SLOT J13

TYPICAL TOMAR FIELD WIRE DETAIL

(input file, rear view)

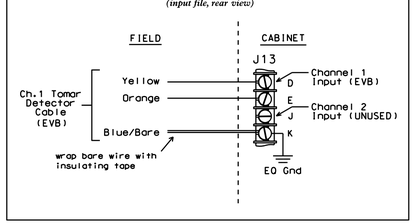

INPUT FILE CONNECTION & PROGRAMMING CHART

LOOP NO.	LOOP TERMINAL	INPUT FILE POS.	DETECTOR NO.	PIN NO.	ATTRIBUTES	NEMA PHASE
1B	TB2-1,2	I1U	14	56	5 7	1
			10	56	5 7	6
2A	TB2-5,6	I2U	1	39	5 7	2
2B	TB2-7,8	I2L	5	43	5 7	2
2C	TB2-9,10	I3U	21	63	5 7	2
4A	TB4-9,10	I6U	3	41	5 7	4
4B	TB4-11,12	I6L	7	45	5 7	4
6A	TB3-5,6	J2U	2	40	5 7	6
6B	TB3-7,8	J2L	6	44	5 7	6
8A	TB5-9,10	J6U	4	42	5 7	8
PED PUSH BUTTONS						
P21,P22	TB8-4,6	I12U	25	67	2	2 PED
P41,P42	TB8-5,6	I12L	27	69	2	4 PED
P61,P62	TB8-7,9	I13U	26	68	2	6 PED
P81,P82	TB8-8,9	I13L	28	70	2	8 PED

NOTE: PROGRAM DETECTOR DELAY AND CARRYOVER TIMES AS SPECIFIED ON SIGNAL DESIGN PLANS.

NOTE: INSTALL DC ISOLATORS IN INPUT FILE SLOTS I12 AND I13.

DETECTOR ATTRIBUTES LEGEND:

1-FULL TIME DELAY
2-PED CALL
3-RESERVED
4-COUNTING
5-EXTENSION
6-TYPE 3
7-CALLING
8-ALTERNATE

INPUT FILE POSITION LEGEND: J2L
FILE J
SLOT 2
LOWER

LOAD RESISTOR INSTALLATION DETAIL

(install resistor as shown below)

ACCEPTABLE VALUES

VALUE (ohms)	WATTAGE
1.5K - 1.9K	25W (min)
2.0K - 3.0K	10W (min)

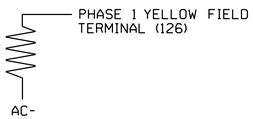

THIS ELECTRICAL DETAIL SUPERSEDES THE DETAIL SEALED ON 03/11/15

THIS ELECTRICAL DETAIL IS FOR
THE SIGNAL DESIGN: 05-1509
DESIGNED: September 2015
SEALED: 2/1/2016
REVISED: N/A

Electrical Detail - Sheet 1 of 2

DOCUMENT NOT CONSIDERED FINAL UNLESS ALL SIGNATURES COMPLETED

ELECTRICAL AND PROGRAMMING DETAILS FOR:

US 501 Bus. (N Roxboro St.) at SR 2001 (Hewitt St.)/ Oxford Commons Shopping Center

Division 5 Durham County Durham

PLAN DATE: December 2015 REVIEWED BY:

PREPARED BY: C. Strickland REVIEWED BY:

REVISIONS	INIT.	DATE

Prepared in the Offices of: Transportation Mobility and Safety Division, Traffic Management Section, Department of Transportation, State of North Carolina

750 N.Greenfield Pkwy,Garner,NC 27529

SEAL: NORTH CAROLINA PROFESSIONAL SEAL 036880 ENGINEER KEITH M. MIMS

DocuSigned by: Keith M. Mims 2/4/2016
2FB0786E8CD34A5...

DATE

SIG. INVENTORY NO. 05-1509

04-FEB-2016 14:43
S:*ITS&SM*ITS_Signals*Workgroups*Sig Mark*Strickland*051509_sm_ele_xxxx.dgn
cestrickland